GAMMATRON TYPE 257B

JAN 4E 27

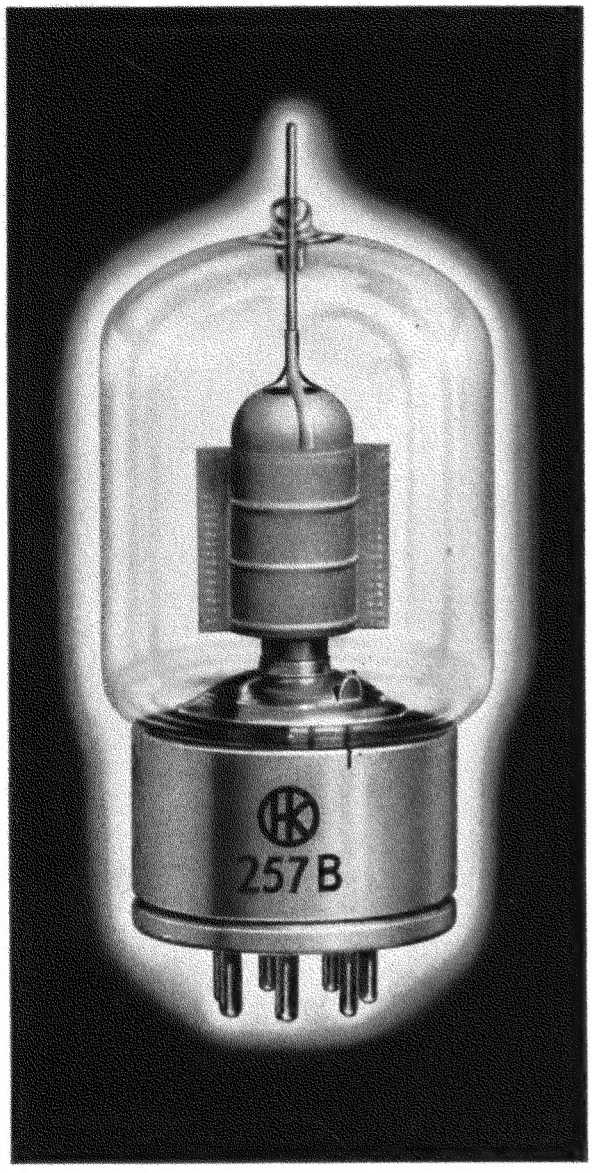

BEAM PENTODE

75 watt radiation cooled beam pentode. Exceptional very high frequency performance.

ELECTRICAL DATA

Plate Dissipation	75 Watts
Maximum Screen Input	25 Watts
Filament Voltage	5.0 Volts
Filament Current	7.5 Amps.

INTERELECTRODE CAPACITIES

Plate-Grid Capacity	0.08 Mmfd.
Input Capacity	10.5 Mmfd.
Output Capacity	4.7 Mmfd.

PHYSICAL DATA

Plate	Enclosed Cylindrical Tantalum
Grids	Vertical Bar Tantalum
Filament	Thoriated Tungsten
Base	Giant 7-pin Bayonet
Envelope	Nonex Glass
Net Weight	6 Ounces
Shipping Weight	1 Pound
Maximum Height	$6\frac{3}{16}$ Inches
Maximum Diameter	$2\frac{11}{16}$ Inches

The type HK-257B is capable of very high frequency operation and does not require neutralization. It has very low driving power requirements, will stand high plate and screen voltages, and will stand large momentary overloads. These features are made possible through the use of tantalum plate and grid elements and an advanced design by Heintz and Kaufman Ltd. engineers. The HK-257B is the only multi-element tube in its class capable of this kind of performance.

High mutual conductance in combination with high voltage capabilities makes the grid driving power requirements of the HK-257B very low. And under many conditions the power consumed is negligible. This feature reduces the number and size of the preliminary stages required in any transmitter resulting in savings and advantages that are obvious.

The plate and grid leads are short and sturdy, resulting in low lead inductance. The suppressor grid and screen grid are each supported with two parallel leads. All four leads are terminated on the base so that they may be individually bypassed to ground. The feed back capacity is extremely low and thus it is possible to operate the HK-257B even at very high frequencies without neutralization. This feature makes the HK-257B adaptable to instant band switching circuits and such circuits may be designed with a minimum of controls.

Installation into practical circuits is facilitated by the unique physical design of the HK-257B. The input and output circuits are readily isolated and complete shielding is assured when the base shell is grounded.

7500 4-46

HEINTZ AND KAUFMAN LTD.

SOUTH SAN FRANCISCO, CALIFORNIA, U·S·A

TYPE HK-257B

The information on this and the following page does not represent exact conditions of operation to be imposed for any particular situation. Because tubes are used under many widely different conditions Heintz and Kaufman will gladly furnish information for applications which differ appreciably from the illustrative examples given.

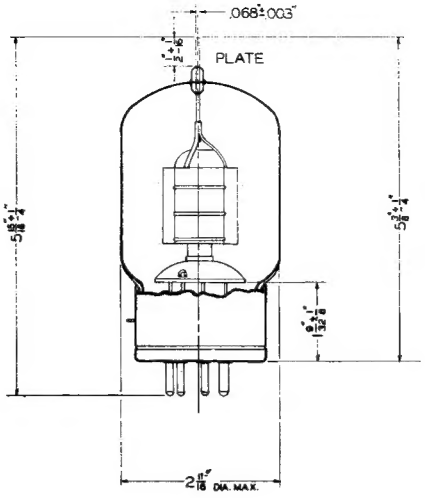

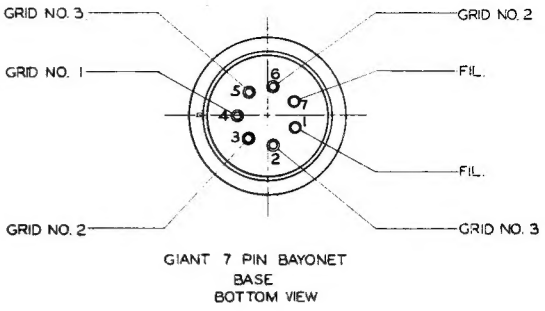

MAXIMUM RATINGS AND TYPICAL OPERATING CONDITIONS

RADIO FREQUENCY POWER AMPLIFIER— CLASS "C" UNMODULATED

	Maximum Rating Per Tube	TYPICAL OPERATION, 1 TUBE*						
Power Output		235	230	230	230	225	110	Watts
Driving Power		0	0.1	0.2	1.4	1.9	2.4	Watts
DC Plate Volts	4000	3000	2000	2000	2000	2000	1000	Volts
DC Plate Current	150	100	150	150	150	150	150	M. A.
DC Suppressor Voltage		60	60	0	60	0	60	Volts
DC Suppressor Current		3	3	0	4	0	6	M. A.
DC Screen Voltage	750	750	750	750	500	500	400	Volts
DC Screen Current	30	8	11	18	11	25	20	M. A.
DC Control Grid Voltage	−500	−200	−200	−200	−200	−290	−180	Volts
DC Control Grid Current	25	0	0.4	0.7	6	8	10	M. A.
Peak R.F. Control Voltage		170	215	225	255	270	270	Volts
Plate Dissipation	75	65	70	70	70	75	40	Watts
DC Plate Input	300	300	300	300	300	300	150	Watts

*Other values to obtain similar results may be used provided the maximum ratings are not exceeded.

RADIO FREQUENCY POWER AMPLIFIER— CLASS "C" PLATE MODULATED

(100% Modulation Peaks, 60% Average Value)

	Maximum Rating Per Tube	TYPICAL CARRIER CONDITIONS, 1 TUBE					
Power Output		200	195	145	143	95	Watts
Driving Power		0.1	0.2	0.4	1.7	1.7	Watts
DC Plate Volts	3000	2500	2000	1500	1500	1000	Volts
DC Plate Current	135	100	125	135	135	135	M. A.
DC Suppressor Volts		60	60	60	60	60	Volts
DC Suppressor Current		3	3	3	4	5	M. A.
DC Screen Volts	600	600	600	600	400	400	Volts
DC Screen Current	30	8	10	11	11	13	M. A.
DC Control Grid Volts	−500	−200	−200	−200	−130	−130	Volts
DC Control Grid Current	25	0.6	1.0	1.4	8	8	M. A.
Peak R.F. Control Voltage		220	235	255	235	235	Volts
Plate Dissipation	65	50	55	57	59	40	Watts
DC Plate Input	250	250	250	202	202	135	Watts

RADIO FREQUENCY DOUBLER AMPLIFIER
MAXIMUM INPUT 200 WATTS

	Maximum Rating Per Tube	TYPICAL OPERATION, 1 TUBE				
Power Output		120	110	110	80	Watts
Driving Power		0	0.2	1.8	5.5	Watts
DC Plate Voltage	4000	2000	1500	1500	1000	Volts
DC Plate Current	150	95	120	120	150	M. A.
DC Suppressor Voltage		60	60	60	60	Volts
DC Suppressor Current		2	3	4	6	M. A.
DC Screen Voltage	750	750	750	500	500	Volts
DC Screen Current	30	10	15	13	25	M. A.
DC Control Grid Voltage	−500	−400	−400	−330	−400	Volts
DC Control Grid Current	25	0	0.5	5	12	M. A.
Peak R.F. Control Voltage		400	425	400	510	Volts
Plate Dissipation	75	70	70	70	70	Watts
DC Plate Input	200	190	180	180	150	Watts

CLASS "A" AMPLIFIER—AUDIO AND TELEVISION

	2 Tubes Overbiased	1 TUBE OPERATION		
Power Output	315	30	25	Watts
DC Plate Voltage	1500	1000	500	Volts
DC Plate Current Zero Signal	80	75	150	M. A.
DC Plate Current Max. Signal	292			M. A.
DC Screen Voltage	750	300	500	Volts
DC Screen Current Zero Signal	2	5	10	M. A.
DC Screen Current Max. Signal	38			M. A.
DC Suppressor Voltage	60	0	0	Volts
DC Control Grid Voltage (Approx.)	−125	−27	−36	Volts
Peak Audio Voltage	240	27	36	Volts
Plate Input Max. Signal	438			Watts
Plate Dissipation Max.	150	75	75	Watts
Load Resistance		12,000	2600	
Load Resistance, Plate to Plate	12,000			Ohms

RADIO FREQUENCY POWER AMPLIFIER—
CLASS "C" SUPPRESSOR GRID MODULATED
(Maximum Input 110 Watts)

	Maximum Rating Per Tube	TYPICAL CARRIER CONDITIONS, 1 TUBE			
Power Output		35	33	32	Watts
Driving Power		.4	1.4	2.0	Watts
Audio Power		100*	100*	500†	Milliwatts
DC Plate Voltage	2000	2000	1500	1000	Volts
DC Plate Current	100	55	70	90	M. A.
DC Suppressor Voltage	−500	−300	−210	−135	Volts
Peak Suppressor Current		0	0	3	M. A.
DC Screen Voltage‡	600	500	500	600	Volts
DC Screen Current		27	44	41	M. A.
Screen Resistor		2000	2000	5000	Ohms
DC Control Grid Voltage	−500	−130	−130	−130	Volts
DC Control Grid Current	25	3	8	11	M. A.
Peak R.F. Driving Voltage		150	195	200	Volts
Peak A.F. Modulating Voltage		300	210	175	Volts
Plate Dissipation	75	75	72	60	Watts

*Use Type 6C5 tube or equal with 1:2 step-up transformer ratio.
†Use receiving type pentode as 6F6 and 1:1 transformer ratio.
‡Source voltage. Apply through indicated resistor.

TYPE 257B BEAM PENTODE OPERATING NOTES

1. Protect your investment: Always provide sufficient fixed bias or cathode bias to limit the plate current to a safe value. Plate current depends on the screen voltage, not the plate voltage. The tube may be easily damaged by loss of bias because at zero bias the plate current is great with proper screen voltage. Apply reduced plate and screen voltages when tuning up transmitter.
2. The 257B has a very high transconductance and hence extreme care must be taken to prevent self-oscillation. The output and input circuits must be completely separated. Parasitic suppressors are often helpful. Screen and suppressor leads should be by-passed directly at the socket. For operation on high frequencies both parallel screen and suppressor leads should be by-passed to the filament. Because the internal screening shield is inside the metallic base shell, it is only necessary to provide spring contacts grounding the base shell to the panel to complete the shielding.
3. In employing various combinations of plate and screen voltages, the following general rules will be helpful:
   (1) Driving requirements and screen current are lower with high screen voltage.
   (2) Driving requirements are lower and screen current is decreased with approximately 60 volts applied to the suppressor.
   (3) For the majority of applications zero suppressor voltage will be satisfactory.
4. Apply screen voltage or excitation after plate voltage or at the same time, not before. Remove screen voltage or excitation before plate voltage or at same time.
5. In tuning the tank coil to resonance there may be little change in plate current when the amplifier is loaded. Use the tantalum plate as a resonance indicator. Minimum plate temperature indicates resonance.

VERY HIGH FREQUENCY RATINGS

Percentage maximum plate voltage and input power based on low frequency ratings shown on previous page.

Frequency	*75*	*120*	*150 Mc.*
Class "B" or Grid Modulated R. F. P. A.	100%	90%	80%
Class "C" R. F. P. A. Telegraph or Telephone	100%	75%	50%

VHF POWER AMPLIFIER LAYOUT

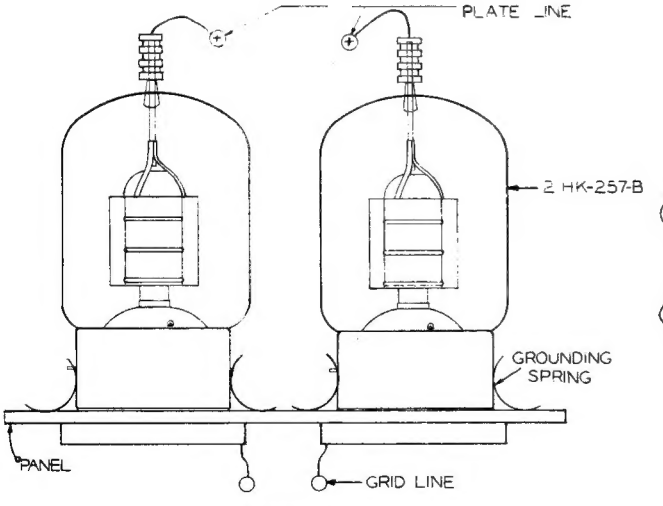

ELEVATION

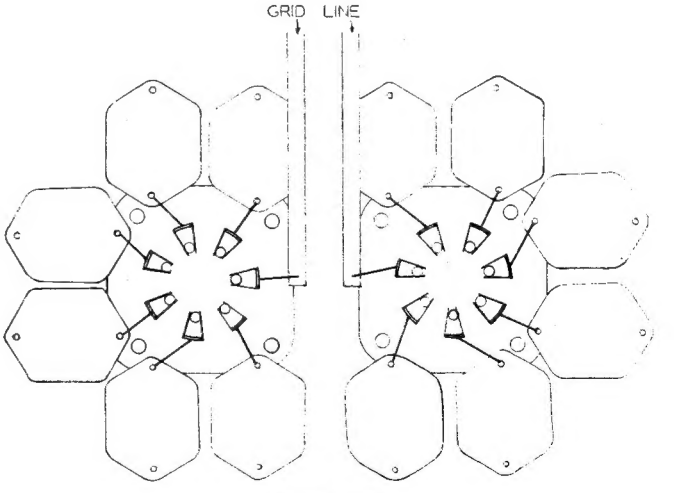

BOTTOM VIEW
V.H.F. POWER AMPLIFIER LAYOUT

Gammatron Tubes

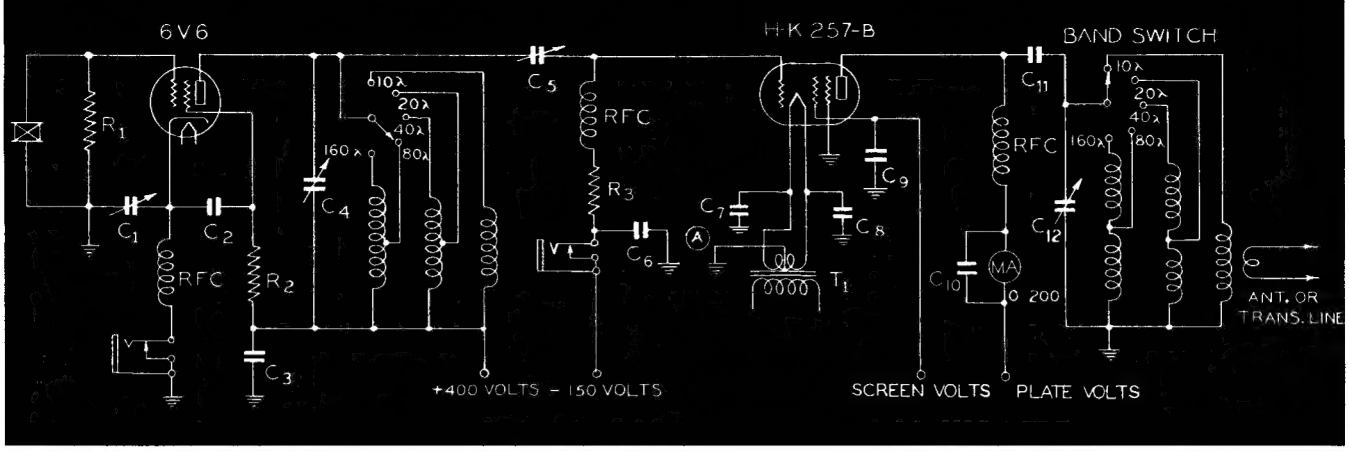

HK-257B ALL-BAND TRANSMITTER

The Type 257B beam pentode is particularly adapted for an all-band radio transmitter, since it requires extremely low driving power and does not require neutralization. Such a transmitter is shown in the above wiring diagram. It is capable of operation in all of the amateur bands from 10 to 160 meters. It incorporates band switching in the crystal oscillator and radio frequency amplifier circuit. Any of the low power all-band coil assemblies may be employed in the oscillator plate circuit.

The Type 257B beam pentode requires only a small amount of radio frequency excitation and hence a single 6V6 metal tube in the oscillator circuit will drive the radio frequency amplifier to its full output. The careful internal shielding of the 257B provides that no neutralization is necessary.

The 257B has a tantalum plate which makes an excellent tuning indicator. Since maximum antenna output always occurs at the point of minimum plate color, this form of tuning is more convenient and more accurate than the indication of a milliammeter in the plate or cathode circuit. The current dip is rather small at the point of resonance in a pentode tube when proper load is coupled into the tank circuit.

MODULATION

If desired, this radio frequency unit may be adapted to telephone purposes by applying a number of forms of modulation. The tube may be plate modulated, suppressor grid modulated, or cathode modulated in accordance with the particular requirements.

CRYSTAL OSCILLATOR

The Type 6V6 oscillator employs a radio frequency choke in its cathode circuit, together with an adjustable condenser for controlling the amount of regeneration in this circuit. This condenser must be set to a value that allows the plate circuit to be tuned to the second harmonic of 80 and 160 meter crystals. For 10 and 20 meter operation, crystals of these respective frequencies should be employed. A cathode regenerative circuit is a distinct aid in obtaining good output from 10 to 20 meter crystals.

In employing standard band switching coil units with the oscillator, it will probably be necessary to remove a few turns from the 10 meter coil in order to resonate the circuit over the entire band.

COIL DATA

The final tank coils are wound on ceramic forms. A ten meter coil has 4½ turns of #10 wire wound on a 1⅛" ceramic form. The length of the winding is approximately 1¼". The 20 and 40 meter coils are wound on 2½" diameter ceramic forms. Five turns for the 20 meter coil and nine additional turns for the 40 meter coil. The nine turn winding is spaced approximately 1" from the five turn winding and the two windings are connected in series to give a coil of 14 turns to the 40 meter operation. The 80 and 160 meter coils are wound in a similar manner on a 3" diameter ceramic form. The 80 meter section of the coil has 12½ turns and the 160 meter has a total of 28½ turns. A ribbed coil form may be employed such that approximately 7 turns per inch of #12 enameled wire may be employed. The 20 and 40 meter coil is wound of the same size wire employing six turns per inch. All of these coils should be grouped around the Type 257B pentode with the high frequency coil mounted close to the Band Switch. If operation on 160 meters is not contemplated, a final tank condenser of approximately 100 to 125 micromicrofarads should be employed in place of the 250 micromicrofarad unit.

OPERATION

Antenna may be coupled to the tuned plate circuit by link coupling to the external tuned antenna circuit or by inductive coupling with a few turns in wire wound directly over the coil form. The Type 257B will require a plate voltage of 1500 to 2000 volts, while 400 volts should be supplied for the Type 6V6 tube and this voltage may be also applied to the screen of the Type 257B beam pentode.

Since the tuning of the Type 257B beam pentode is somewhat unconventional compared to that of a neutralized triode amplifier, it is desirable to provide some means of indicating the amount of antenna or feeder current at all times, although the degree of plate color and amount of input to the tube always gives a good indication of the operating efficiency.

COMPONENTS

R_1—100,000 Ohm, 1 Watt resistor.
R_2—15,000 Ohm, 10 Watt resistor.
R_3—5,000 Ohm, 10 Watt resistor.
C_1—350 mmf. variable mica condenser.
C_2—.005 mf. 500 Volt condenser.
C_3—.01 mf. 500 Volt condenser.
C_4—140 mmf. variable air condenser.
C_5—100 mmf. variable air condenser.
C_6—1.0 mf. paper condenser.
C_7, C_8—.003 mf. mica condenser.
C_9—.01 mf. 1000 Volt mica condenser.
C_{10}—.01 mf. mica condenser.
C_{11}—.002 mf. 5000 Volt mica condenser.
C_{12}—250 mmf. 3000 Volt variable air condenser.
T_1—5.0 Volt 7.5 Amp. filament transformer.

Gammatron Tubes

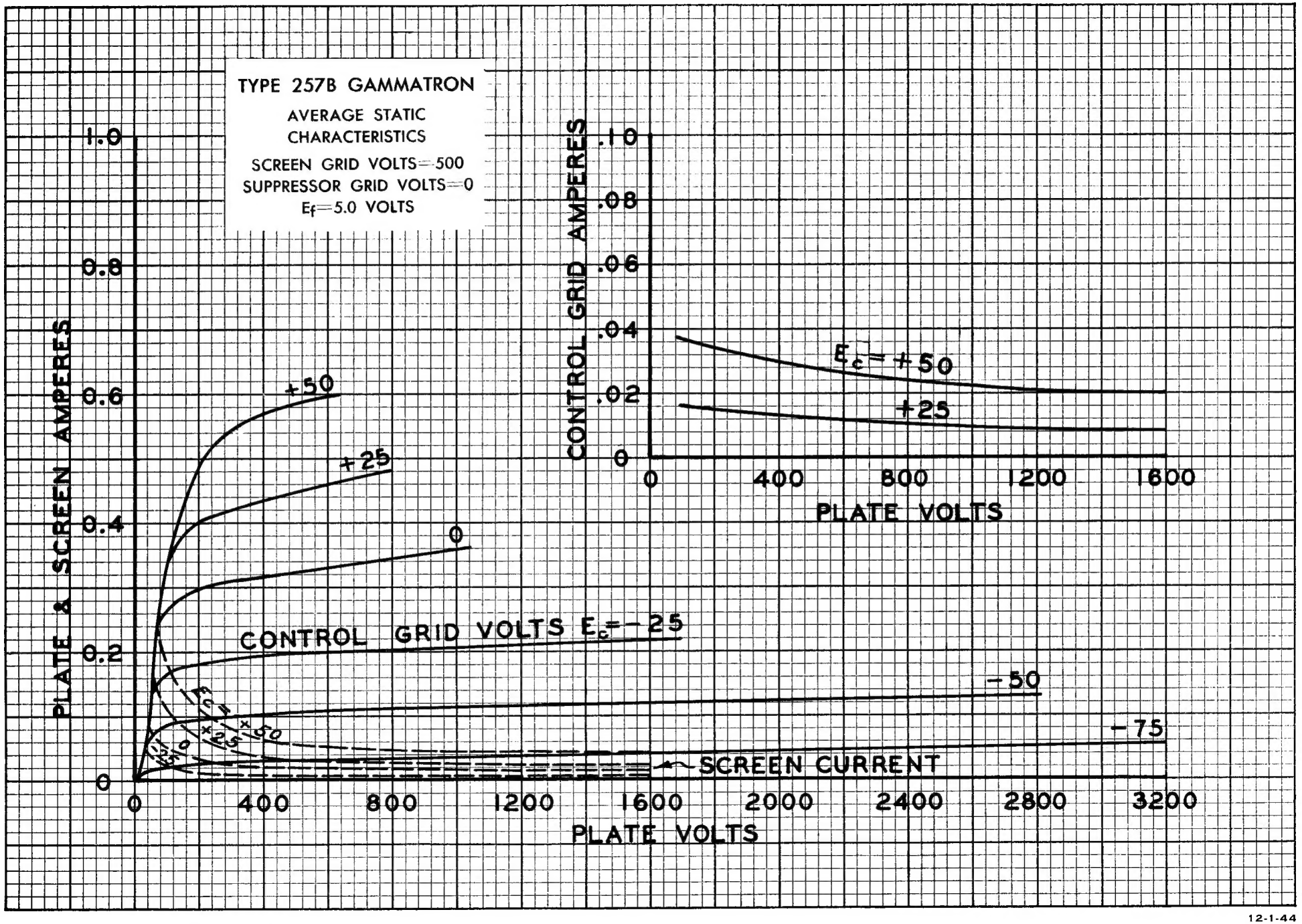
TYPE 257B GAMMATRON
AVERAGE STATIC CHARACTERISTICS
SCREEN GRID VOLTS=500
SUPPRESSOR GRID VOLTS=0
Ef=5.0 VOLTS
PLATE & SCREEN AMPERES
1.0
0.8
0.6
0.4
0.2
0
+50
+25
0
CONTROL GRID VOLTS Ec=-25
-50
-75
SCREEN CURRENT
0
400
800
1200
1600
2000
2400
2800
3200
PLATE VOLTS
CONTROL GRID AMPERES
.10
.08
.06
.04
.02
0
Ec=+50
+25
0
400
800
1200
1600
PLATE VOLTS

12-1-44

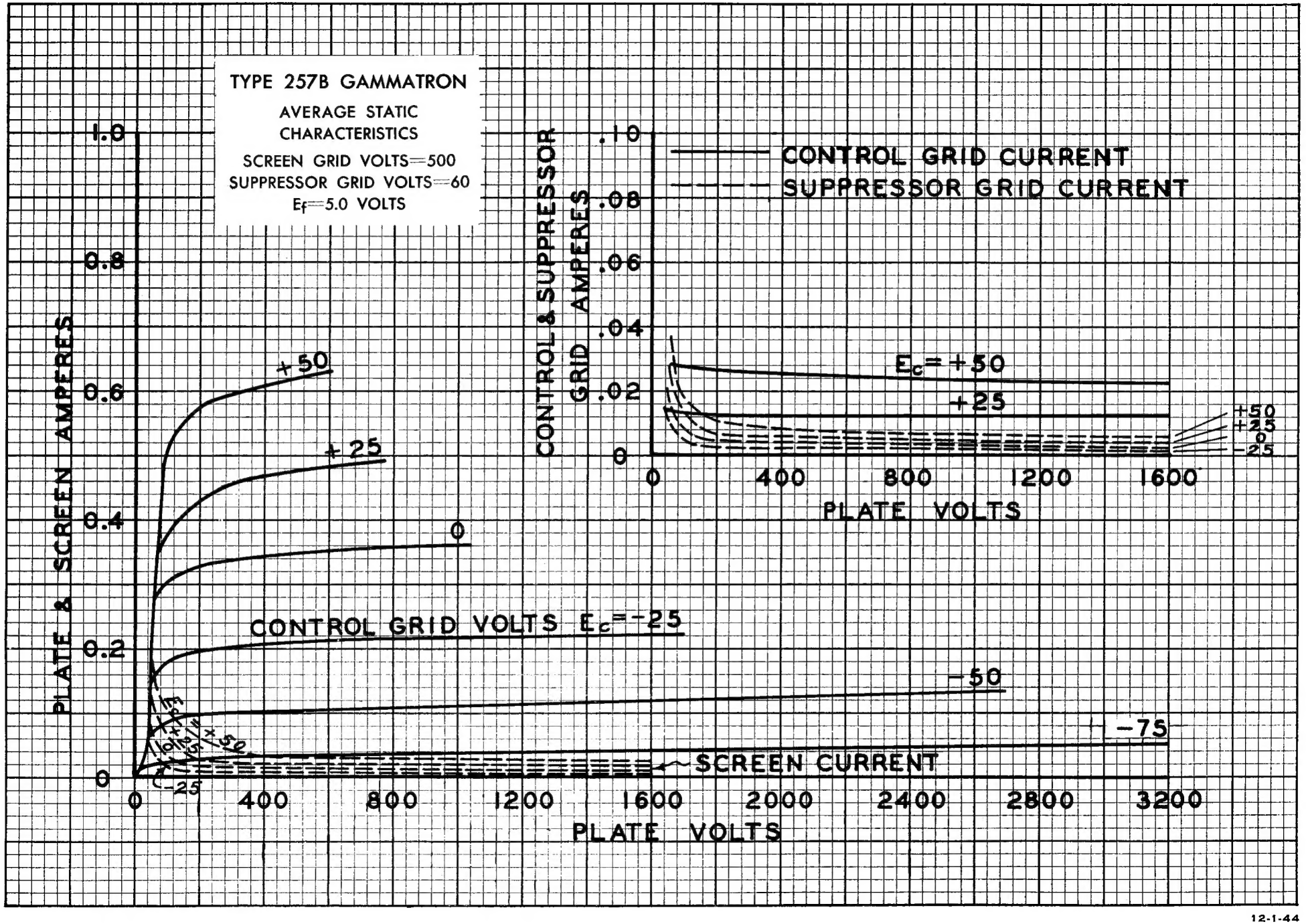
TYPE 257B GAMMATRON
AVERAGE STATIC CHARACTERISTICS
SCREEN GRID VOLTS=500
SUPPRESSOR GRID VOLTS=60
Ef=5.0 VOLTS
PLATE & SCREEN AMPERES
1.0
0.8
0.6
0.4
0.2
0
+50
+25
0
CONTROL GRID VOLTS Ec=-25
-50
-75
SCREEN CURRENT
0
400
800
1200
1600
2000
2400
2800
3200
PLATE VOLTS
CONTROL & SUPPRESSOR GRID AMPERES
.10
.08
.06
.04
.02
0
CONTROL GRID CURRENT
SUPPRESSOR GRID CURRENT
Ec=+50
+25
+50
+25
0
-25
0
400
800
1200
1600
PLATE VOLTS

12-1-44

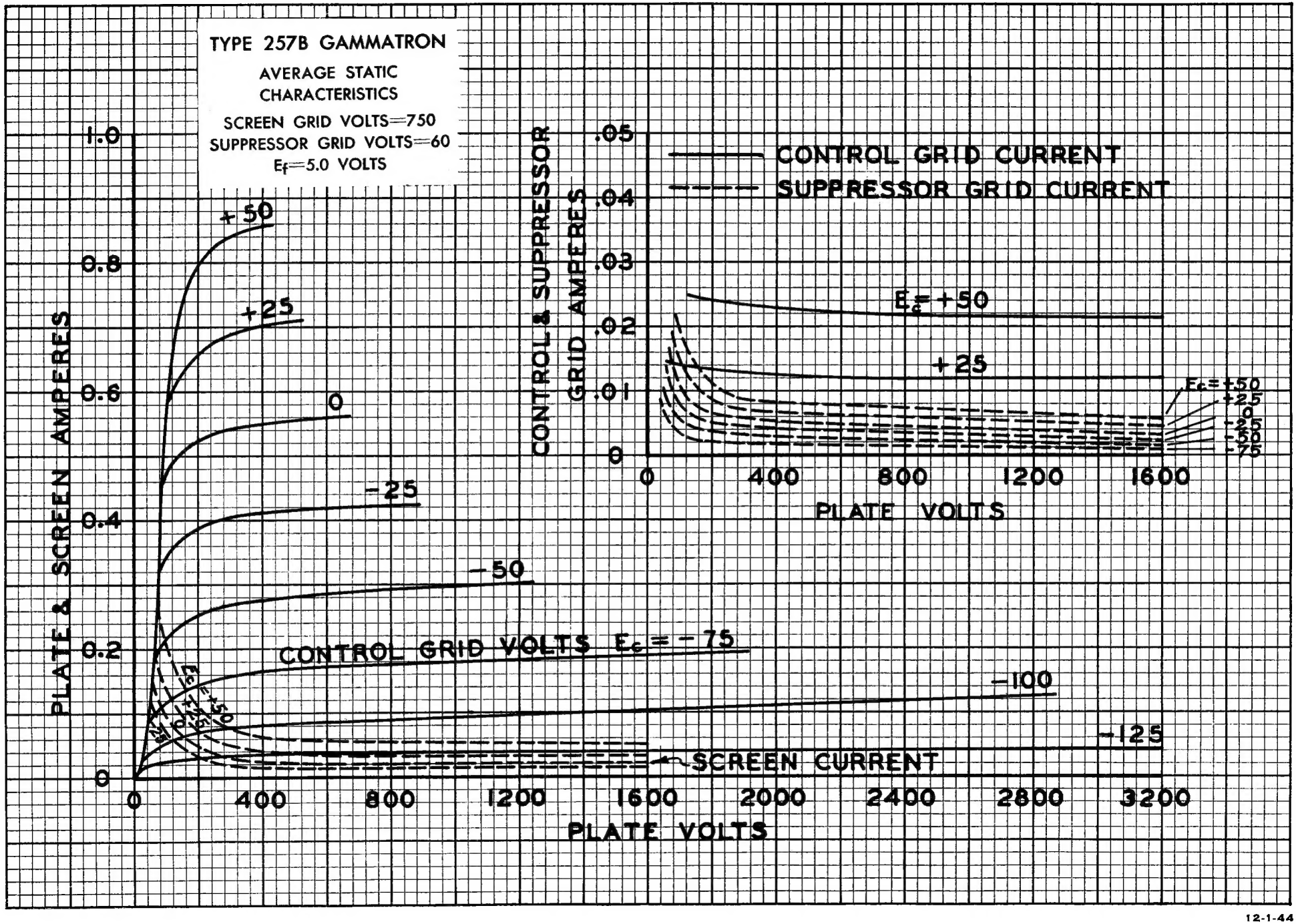
TYPE 257B GAMMATRON
AVERAGE STATIC CHARACTERISTICS
SCREEN GRID VOLTS=750
SUPPRESSOR GRID VOLTS=60
Ef=5.0 VOLTS
PLATE & SCREEN AMPERES
1.0
0.8
0.6
0.4
0.2
0
+50
+25
0
-25
-50
CONTROL GRID VOLTS Ec=-75
-100
-125
SCREEN CURRENT
0
400
800
1200
1600
2000
2400
2800
3200
PLATE VOLTS
CONTROL & SUPPRESSOR GRID AMPERES
.05
.04
.03
.02
.01
0
CONTROL GRID CURRENT
SUPPRESSOR GRID CURRENT
Ec=+50
+25
0
-25
-50
-75
0
400
800
1200
1600
PLATE VOLTS

12-1-44